Reo Full Recessed

AIW10376 39.80 in

SPI LIGHTING
PROJECT DETAILS

JOB NAME:
TYPE:
NOTES:

DESCRIPTION

Reo can be fully recessed, revealing only the faceplate. With a 1" wall projection, Reo easily satisfies ADA standards. Five optional color gels add a splash of color, serving as a guide or visual path. The ability to complement any style comes standard.

EMR ADA

FEATURES & BENEFITS

- Add a splash of color to a space with optional theatrical color gels (offered in five standard colors with custom colors available upon request)
- Optional durable wood laminate faceplate option adds a warm, natural texture to a space
- Optional embossed stainless steel-linear and crosshatch face plate option adds a unique, metal accent and texture to a space
- Compliant with Americans with Disabilities Act (ADA) requirements
- Handcrafted in USA

SPECIFICATIONS

- **LIGHT SOURCE:** White LED light engine
- **CRI:** 80+ or 90+
- **LUMEN MAINTENANCE:** L70 = >50,000 Hrs.
- **CCT**: 2700K, 3000K, 3500K, 4000K, 5000K
- **DRIVER:** Integral Class 2 power supply standard
- **DIMMING:** 0-10V controls standard to 1% on LED light engines
- **CONTROLS:** Contact factory for control options (e.g., Lutron Athena, Current NX, nLight, Enlighted, Encelium, Wattstopper, WaveLinx, or Casambi)
- **EMERGENCY:** Remote battery option is provided with 10W Constant Power Battery back-up, providing 90 Minutes of Emergency operation. Contact factory for other Emergency options.
- **CONSTRUCTION:** Formed metal construction provides durable protection for internal components and is recyclable
- **FINISH:** Faceplate is finished to match your specification (unless a faceplate option is specified). Choose from 26

standard thermoset polyester powder coat paint colors or brushed aluminum finish. RAL®, Pantone®, or custom finishes available upon request.

- **MODIFICATIONS:** Consult factory for all modification requests
- **APPROVALS:** ETL listed to UL standards (US & Canada) for use in damp locations; not recommended for exterior applications

DIMENSIONS

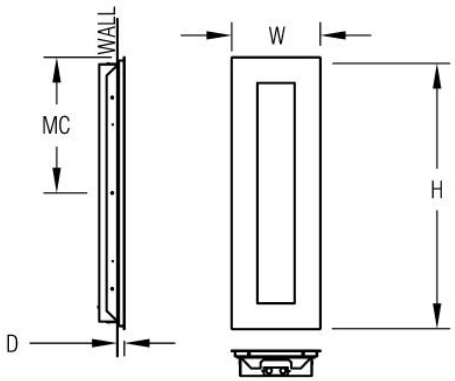

W	H	D	MC
13 in 33 cm	39.8 in 101.1 cm	1 in 2.5 cm	19.5 in 49.5 cm

Mounting Weight
Approximate: 25 lb (12 kg)

CONFIGURATOR

To configure your spec sheet online, go to www.spilighting.com/AIW10376. Not all options are available in all configurations; consult factory for details.

Required Field *

Catalog	Light Source*	Primary Finish*	Voltage*	Lamp Options*	CRI*	Mounting*	Emergency	Color Accents*	Faceplate Options
AIW10376									
	A		B	C	D	E	F	G	H

A - LIGHT SOURCE *

To ensure color consistency, SPI uses precise bin selection and strict quality processes to maintain a 3-step (MacAdam) SDCM on all white LED lampings. Published LED luminaire wattages are calculated using a typical power supply efficiency of 88%; exact wattages may vary based on application. Alternative wattages available upon request.

☐ **L36W** | White 36W LED Light Engine| Delivered Lumens: 1,467
☐ **L72W** | White 72W LED Light Engine| Delivered Lumens: 2,933

See last page for finish options

B - VOLTAGE *

☐ **120-277V** | Universal Voltage

C - LAMP OPTIONS *

Apply multiplier from chart for delivered lumens at other CCT's and CRI's.

- ☐ **2700K** | 2700K CCT
- ☐ **3000K** | 3000K CCT
- ☐ **3500K** | 3500K CCT
- ☐ **4000K** | 4000K CCT
- ☐ **5000K** | 5000K CCT

	80 CRI	90 CRI
2700K	1.00	0.84
3000K	1.00	0.84
3500K	1.00	0.84
4000K	1.00	0.84
5000K	1.00	0.84

D - CRI *

- ☐ **DF_80** | (default)
- ☐ **90**

E - MOUNTING *

Requires recessed mounting. Additional mounting structure and hardware required (by others).

- ☐ **DF_REC** | Recessed Wall Mount (default)

F - EMERGENCY

10W, Constant Power Battery Back-up, with 90 minutes of emergency operation. EMR includes damp location enclosure for Battery back-up.

- ☐ **EMR** | Emergency Battery Remote

G - COLOR ACCENTS *

Contact factory to customize a color gel that coordinates with your application.

- ☐ **CG00** | White Color Gel
- ☐ **CG01** | Red Color Gel
- ☐ **CG02** | Orange Color Gel
- ☐ **CG03** | Green Color Gel
- ☐ **CG04** | Blue Color Gel

CG00

CG01

CG02

CG03

CG04

H - FACEPLATE OPTIONS

- ☐ **ES1** | Embossed Stainless Steel-Linear Pattern
- ☐ **ES2** | Embossed Stainless Steel-Cross Hatch Pattern
- ☐ **WF1** | Cherry Laminate
- ☐ **WF2** | Maple Laminate

ES1

ES2

WF1

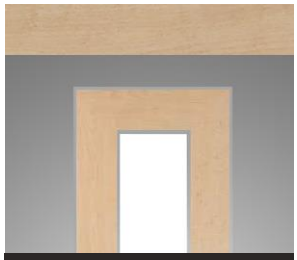
WF2

Standard Finishes

The colors shown are representative. Their actual appearance may vary due to differences in display settings. You can request color chips by emailing contact@spilighting.com. Please note, finishes may not be available in all configurations.

Paint Colors

PT01 RAL9003 Signal White (Gloss)	**PT51** Matte White (Textured)	**PT02** White (Textured)	**PT04** RAL9001 Cream (Textured)	**PT67** RAL7044 Silk Grey (Textured)
PT53 RAL7035 Light Grey (Textured)	**PT54** RAL7037 Dusty Grey (Textured)	**PT55** RAL7012 Basalt Grey (Textured)	**PT56** RAL7016 Anthracite Grey (Textured)	**PT11** Black (Textured)
PT57 RAL1015 Light Ivory (Textured)	**PT58** RAL8004 Copper Brown (Textured)	**PT59** RAL6021 Pale Green (Textured)	**PT60** RAL1019 Grey Beige (Textured)	**PT61** RAL7006 Beige Grey (Textured)
PT62 RAL1003 Signal Yellow (Textured)	**PT63** RAL3001 Signal Red (Textured)	**PT64** RAL6001 Emerald Green (Textured)	**PT65** RAL5005 Signal Blue (Textured)	**PT66** RAL5003 Sapphire Blue (Textured)

Metallic Paint Colors

PT22 Platinum (Metallic Gloss)	**PT48** Brass (Metallic Textured)	**PT28** Dark Stainless (Metallic Gloss)	**PT49** Bronze (Metallic Textured)	**PT32** Dark Bronze (Metallic Gloss)
PT46 Aluminum (Metallic Textured)				

Brushed Aluminum

BAL
Brushed Aluminum

Specialty Finishes

More RAL®, Pantone®, and custom finishes are available upon request. Setup fee and additional lead time applies.Call factory for details.