Novato Lines + Arcs

AIP12072 5.00 in | Arcs

SPI LIGHTING
PROJECT DETAILS

JOB NAME:
TYPE:
NOTES:

DESCRIPTION

These architectural building blocks are fundamental design tools that enable endless expression of your lighting ideas to meet specific customer requirements. Available in 3', 4' and 5' radiuses, Novato Arcs deliver illumination tailored to fit each unique space. Whether a simple luminous arc is needed or a complex pattern with sweeping curves, this lighting provides limitless possibilities. Pair with Novato Lines and connectors for even more options. For a complimentary lighting layout, contact our applications team at SPIteam@spilighting.com.

EMR

FEATURES & BENEFITS

- Fully enclosed three-sided luminous form brightens horizontal and vertical planes
- Provides functional lighting with comfortable luminance levels
- Matte acrylic diffuser emanates filtered, uniform illumination with higher light transmission than traditional opal acrylic
- Strong lines yield a distinctive visual presence
- Ideal for separating open offices, providing wayfinding, or adding markings
- Up to 550' of continuous light with just one power drop
- Maneuvers easily around obstructions
- Easy daisy chain wiring simplifies installation
- Luminous Lines (AIP12071) and Connectors (AIP12073) are ordered separately
- Materials, cross-section, and product details match the entire Novato Family; expand your drawer of design tools using matching pieces
- Handcrafted in USA

SPECIFICATIONS

- **LIGHT SOURCE:** White LED light engine
- **CRI:** 80+ or 90+
- **LUMEN MAINTENANCE:** L70 = >50,000 Hrs.
- **EFFICACY:** 102 lm/W delivered
- **CCT**: 2700K, 3000K, 3500K, 4000K, 5000K
- **VOLTAGE:** 120-277V standard
- **DRIVER:** Integral Class 2 power supply. Power drop kit required

for each continuous run of fixtures; see catalog CPS12153 to order. Connect power drops anywhere along the run.

- **DIMMING:** 1% minimum dim level standard
- **CONTROLS:** 0-10V standard. Lutron Athena, Current NX, and nLight AIR optional. Contact factory for other controls (e.g., Enlighted, Encelium, Wattstopper, WaveLinx, or Casambi).
- **EMERGENCY:** Remote battery option is provided with 10W Constant Power Battery back-up, providing 90 Minutes of Emergency operation. Contact factory for other Emergency options.
- **CONSTRUCTION:** Powerful magnetic connections strengthen joints
- **FINISH:** The top plate and channel are painted PT01 (Signal White, RAL9003)
- **MODIFICATIONS:** Consult factory for all modification requests
- **APPROVALS:** ETL listed to UL standards (US & Canada) for use in damp locations; not recommended for exterior applications

DIMENSIONS

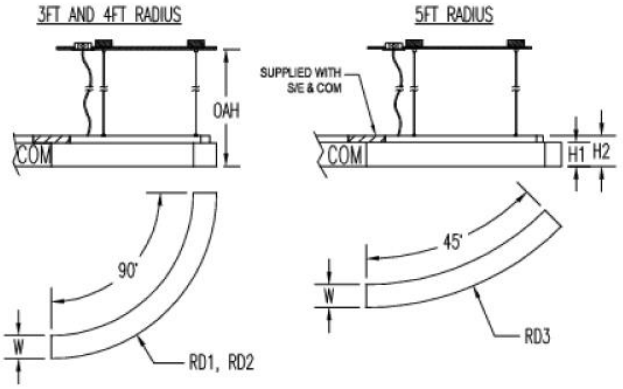

	W	OAH	RD1	H1	H2
3FT	5 in 12.7 cm	48 in 121.9 cm	36 in 91.4 cm	5.1 in 13 cm	6.6 in 16.8 cm
Mounting Weight: Approximate: 5 lb (3 kg)					
4FT	5 in 12.7 cm	48 in 121.9 cm	48 in 121.9 cm	5.1 in 13 cm	6.6 in 16.8 cm
Mounting Weight: Approximate: 10 lb (5 kg)					
5FT	5 in 12.7 cm	48 in 121.9 cm	60 in 152.4 cm	5.1 in 13 cm	6.6 in 16.8 cm
Mounting Weight: Approximate: 5 lb (3 kg)					

CONFIGURATOR

To configure your spec sheet online, go to www.spilighting.com/AIP12072. Not all options are available in all configurations; consult factory for details.

Required Field *

Catalog	Light Source*	Voltage*	Lamp Options*	CRI	Controls*	Mounting*	Emergency	Other Than Standard Options	Configuration*
AIP12072									
	A	B	C	D	E	F	G	H	I

A - LIGHT SOURCE *

To ensure color consistency, SPI uses precise bin selection and strict quality processes to maintain a 3-step (MacAdam) SDCM on all white LED lampings. Published LED luminaire wattages are calculated using a typical power supply efficiency of 88%; exact wattages may vary based on

application. Alternative wattages available upon request.

3 FOOT RADIUS 90° FIXTURE

- ☐ **3FT-L21W** | White 21W LED Light Engine| Delivered Lumens: 2,145
- ☐ **3FT-L42W** | White 42W LED Light Engine| Delivered Lumens: 4,291

4 FOOT RADIUS 90° FIXTURE

- ☐ **4FT-L29W** | White 29W LED Light Engine| Delivered Lumens: 2,963
- ☐ **4FT-L58W** | White 58W LED Light Engine| Delivered Lumens: 5,925

5 FOOT RADIUS 45° FIXTURE

- ☐ **5FT-L19W** | White 19W LED Light Engine| Delivered Lumens: 1,941
- ☐ **5FT-L37W** | White 37W LED Light Engine| Delivered Lumens: 3,780

B - VOLTAGE *

- ☐ **120-277V** | Universal Voltage

C - LAMP OPTIONS *

Apply multiplier from chart for delivered lumens at other CCT's and CRI's.

- ☐ **2700K** | 2700K CCT
- ☐ **3000K** | 3000K CCT
- ☐ **3500K** | 3500K CCT
- ☐ **4000K** | 4000K CCT
- ☐ **5000K** | 5000K CCT

	80 CRI	90 CRI
2700K	0.91	0.77
3000K	0.94	0.80
3500K	0.97	0.82
4000K	1.00	0.85
5000K	1.00	0.85

D - CRI

- ☐ **DF_80** | (default)
- ☐ **90**

E - CONTROLS *

Extended lead times may apply for controls other than 0-10V. Contact factory for additional control options such as Enlighted, Encelium, Wattstopper, WaveLinx, Casambi, or others.

- ☐ **DF_DIM1** | 0-10V Control, 1% Dimming (default)
- ☐ **AWNR** [1] | Lutron Athena Wireless Node, 1% Dimming
- ☐ **NX** [1] | Current NX Wireless, 1% Dimming
- ☐ **NLTA** [1] | Acuity nLight Air, 1% Dimming

[1] Contact factory for complimentary layout including controls package.

F - MOUNTING *

For mounting center information, go to https://www.spilighting.com/AIP12072 > Downloads > Install Sheets. Power drop canopy mounts to standard 4" octagonal junction box. Field adjustable aircraft cables allow fixture to be mounted at an application appropriate height (up to OAH). The aircraft ceiling coupler can be connected to power drop canopy or can be separated from the power drop canopy to gain flexibility in mounting. See Downloads on website for mounting center measurements. Aircraft cable suspension uses ceiling coupler to mount to structure above. Coupler accepts 1/4-20 threaded rod or can be anchored using through hole (hardware by others). INSTALLATION NOTES: During installation the contractor is responsible to use actual fixtures to ensure accurate mounting centers from one fixture to the next along the length of the linear run.

- ☐ **DF_AC** | Aircraft Cable (default)

G - EMERGENCY

EMR is provided with a remote 10W, constant power battery back-up, for 90 Minutes of emergency operation, in a damp listed enclosure. EMC option if for direct connection to alternate emergency circuit (EM power By Others). All EM options in common section are provided with pass through wiring for normal power circuit within the configuration.

- ☐ **EMC** | Emergency Circuit
- ☐ **EMR** | Emergency Battery Remote

H - OTHER THAN STANDARD OPTIONS

Specify overall height required from ceiling to the bottom of the fixture.

OAH | Pendant suspension length other than standard Length:

I - CONFIGURATION *

Standalone pendants ship with two aircraft cables and include a power drop kit; ends are not magnetized. Start/End units feature one magnetized end and ship with two aircraft cables and one connector splice box. Common units feature two magnetized ends and ship with two aircraft cables and one connector splice box. Start/End and Common units do not include a power drop kit; see catalog CPS12153 to order.

- ☐ **COM** [2] | Common
- ☐ **SAP** | Standalone Pendant
- ☐ **S/EL** [2] | Start/End Left
- ☐ **S/ER** [2] | Start/End Right

[2] Excludes power drop kit; see catalog ID CPS12153 to order

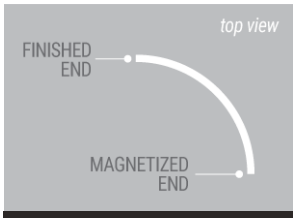

S/EL

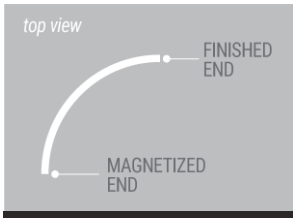

S/ER