Zynn 2" Ring - Pendant

AIP12214 50.00 in | Direct

SPI LIGHTING
PROJECT DETAILS

JOB NAME:
TYPE:
NOTES:

DESCRIPTION

Zynn 2” Ring is the complete tool kit for lighting professionals. This is the line to specify when you need aesthetics you can count on, a wide range of scales, and the performance capabilities to light a space effectively and comfortably.

EMR

FEATURES & BENEFITS

- Sleek 2” x 3” profile
- Seamless housing finished to your specification
- Clean, continuous lines of light with zero pixelation
- Superior fit and finish
- Keep ceilings clean with minimal mounting hardware
- Hidden internal aircraft cable grippers are easy to adjust
- Integral power supply for easier installation
- Only one power drop
- Handcrafted in USA

SPECIFICATIONS

- **LIGHT SOURCE:** White LED light engine
- **DISTRIBUTION:** Direct
- **CRI:** 80+ or 90+
- **LUMEN MAINTENANCE:** L80 = >60,000 Hrs.
- **EFFICACY:** 72 lm/W delivered
- **CCT**: 2700K, 3000K, 3500K, 4000K, 5000K
- **VOLTAGE:** 120-277V standard
- **DRIVER:** Integral Class 2 power supply
- **MAX AMBIENT OPERATING TEMP:** 32°C (90°F)
- **DIMMING:** 1% minimum dim level standard
- **CONTROLS:** 0-10V standard. Lutron Athena and Current NX optional. Contact factory for other controls (e.g., nLight, Enlighted, Encelium, Wattstopper, WaveLinx, or Casambi).
- **EMERGENCY:** Remote battery option is provided with 10W Constant Power Battery back-up, providing 90 Minutes of Emergency operation. Contact factory for other Emergency options.

- **INTEGRATED SURGE PROTECTION:** LED components are protected against minor surge events
- **DIFFUSER:** Seamless matte opal acrylic
- **CONSTRUCTION:** Housing fabricated from 6000 series aluminum extrusion
- **FINISH:** Housing and mounting components finished to match. To specify separately, contact factory. Choose from 26 standard thermoset polyester powder coat paint colors or various metal finishes. RAL®, Pantone®, or custom finishes available upon request.
- **MODIFICATIONS:** Consult factory for all modification requests, including alternate sizes
- **APPROVALS:** ETL listed to UL standards (US & Canada) for use in damp locations; not recommended for exterior applications

DIMENSIONS

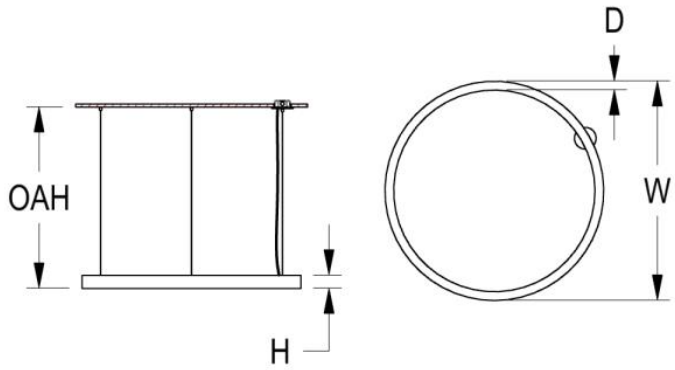

W	H	D	OAH
50 in 127 cm	3 in 7.6 cm	2 in 5.1 cm	54 in 137.2 cm

Mounting Weight
Approximate: 25 lb (12 kg)

CONFIGURATOR

To configure your spec sheet online, go to www.spilighting.com/AIP12214. Not all options are available in all configurations; consult factory for details.

Required Field *

Catalog	Light Source*	Primary Finish*	Voltage*	Lamp Options*	CRI*	Controls*	Mounting*	Emergency	Other Than Standard Options
AIP12214									
	A		B	C	D	E	F	G	H

A - LIGHT SOURCE *

To ensure color consistency, SPI uses precise bin selection and strict quality processes to maintain a 3-step (MacAdam) SDCM on all white LED lampings. Published LED luminaire wattages are calculated using a typical power supply efficiency of 88%; exact wattages may vary based on application. Alternative wattages available upon request. Choose a DIRECT light source below:

- ☐ **DIR-L42W** | White 42W LED Light Engine | Delivered Lumens: 3,020
- ☐ **DIR-L85W** | White 85W LED Light Engine | Delivered Lumens: 6,112

☐ **DIR-L169W** | White 169W LED Light Engine| Delivered Lumens: 12,151

See last page for finish options

B - VOLTAGE *

☐ **120-277V** | Universal Voltage

C - LAMP OPTIONS *

Apply multiplier from chart for delivered lumens at other CCT's and CRI's.

☐ **2700K** | 2700K CCT
☐ **3000K** | 3000K CCT
☐ **3500K** | 3500K CCT
☐ **4000K** | 4000K CCT
☐ **5000K** | 5000K CCT

	80 CRI	90 CRI
2700K	1.00	0.84
3000K	1.00	0.84
3500K	1.00	0.84
4000K	1.00	0.84
5000K	1.00	0.84

D - CRI *

☐ **DF_80** | (default)
☐ **90**

E - CONTROLS *

Extended lead times may apply for controls other than 0-10V. Contact factory for additional control options such as nLight, Enlighted, Encelium, Wattstopper, WaveLinx, Casambi, or others.

☐ **DF_DIM1** | 0-10V Control, 1% Dimming (default)
☐ **AWNR** [1] | Lutron Athena Wireless Node, 1% Dimming
☐ **NX** [2] | Current NX Wireless, 1% Dimming

[1] Canopy dimensions may change.. Not available with L169W light source.
[2] Canopy dimensions may change.

F - MOUNTING *

Mounts to standard 4" octagonal junction box. Field adjustable cables allow fixture to be mounted at an application appropriate height (up to OAH). For SIA mounting, the aircraft ceiling coupler can be connected to power drop canopy or can be separated from the power drop canopy to gain flexibility in mounting. Cables must be at least 45° to the fixture.

☐ **SIA** | 5" Flat Canopy & 3 Straight Aircraft Cables with White Power Cord; Integral Supply
☐ **MIA** | 6" Flat Monopoint Canopy & 3 Aircraft Cables with White Power Cord; Integral Supply

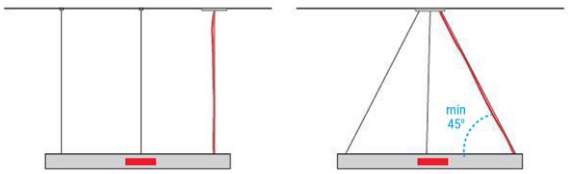

SIA	MIA

G - EMERGENCY

10W, Constant Power Battery Back-up, with 90 minutes of emergency operation. EMR includes damp location enclosure for Battery back-up.

☐ **EMR** | Emergency Battery Remote

H - OTHER THAN STANDARD OPTIONS

Specify overall height required from ceiling to the bottom of the fixture. The minimum OAH is half the diameter of the drum plus the diffuser height.

OAH | Pendant suspension length other than standard Length:

Standard Finishes

The colors shown are representative. Their actual appearance may vary due to differences in display settings. You can request color chips by emailing contact@spilighting.com. Please note, finishes may not be available in all configurations.

Paint Colors

PT01 RAL9003 Signal White (Gloss)	**PT51** Matte White (Textured)	**PT02** White (Textured)	**PT04** RAL9001 Cream (Textured)	**PT67** RAL7044 Silk Grey (Textured)
PT53 RAL7035 Light Grey (Textured)	**PT54** RAL7037 Dusty Grey (Textured)	**PT55** RAL7012 Basalt Grey (Textured)	**PT56** RAL7016 Anthracite Grey (Textured)	**PT11** Black (Textured)
PT57 RAL1015 Light Ivory (Textured)	**PT58** RAL8004 Copper Brown (Textured)	**PT59** RAL6021 Pale Green (Textured)	**PT60** RAL1019 Grey Beige (Textured)	**PT61** RAL7006 Beige Grey (Textured)
PT62 RAL1003 Signal Yellow (Textured)	**PT63** RAL3001 Signal Red (Textured)	**PT64** RAL6001 Emerald Green (Textured)	**PT65** RAL5005 Signal Blue (Textured)	**PT66** RAL5003 Sapphire Blue (Textured)

Metallic Paint Colors

PT22 Platinum (Metallic Gloss)	**PT48** Brass (Metallic Textured)	**PT28** Dark Stainless (Metallic Gloss)	**PT49** Bronze (Metallic Textured)	**PT32** Dark Bronze (Metallic Gloss)
PT46 Aluminum (Metallic Textured)				

Brushed Aluminum

BAL Brushed Aluminum	**MAL** Microbrushed Aluminum

Specialty Finishes

More RAL®, Pantone®, and custom finishes are available upon request. Setup fee and additional lead time applies.Call factory for details.