Canby

AIP9960 32.50 in

SPI LIGHTING

PROJECT DETAILS

JOB NAME:

TYPE:

NOTES:

DESCRIPTION

Decorative pendant with cross bar detail. Featuring four angled rods and a center stem. Opal acrylic, matte acrylic, and hand painted lenses are available. Choose from a palette of both painted and metal finishes.

EMR

FEATURES & BENEFITS

- Opal acrylic diffuser lens enhances a space with filtered illumination
- Handcrafted in USA

SPECIFICATIONS

- **LIGHT SOURCE:** White LED light engine or incandescent
- **CRI:** 80+ or 90+
- **Lumen Maintenance:** L70 = >50,000 Hrs.
- **CCT**: Available LED color temperatures: 2700K, 3000K, 3500K, 4000K, 5000K
- **DRIVER:** LED versions feature integral Class 2 power supply standard
- **DIMMING:** 0-10V controls standard to 1% on LED light engines
- **CONTROLS:** Contact factory for control options (e.g., Lutron Athena, Current NX, nLight, Enlighted, Encelium, Wattstopper, WaveLinx, or Casambi)
- **EMERGENCY:** Remote battery option is provided with 10W Constant Power Battery back-up, providing 90 Minutes of Emergency operation. Contact factory for other Emergency options.
- **DIFFUSER:** Opal acrylic is standard; matte acrylic and hand painted lenses optional. Any upward facing LEDs will be covered with a protective lens
- **MODIFICATIONS:** Consult factory for all modification requests
- **APPROVALS:** ETL listed to UL standards (US & Canada) for use in damp locations; not recommended for exterior applications

DIMENSIONS

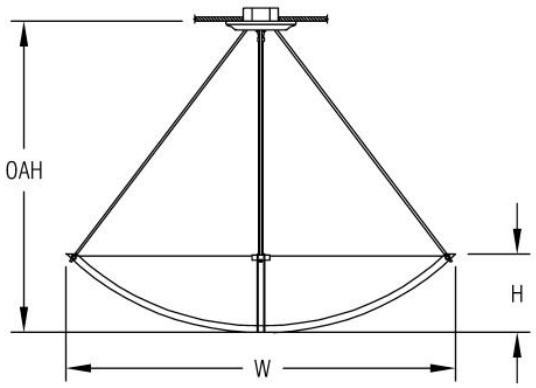

W	H	OAH
32.5 in 82.6 cm	8 in 20.3 cm	36 in 91.4 cm

Mounting Weight
Consult Factory.

CONFIGURATOR

To configure your spec sheet online, go to www.spilighting.com/AIP9960. Not all options are available in all configurations; consult factory for details.

Required Field *

Catalog	Light Source*	Primary Finish*	Voltage*	Lamp Options*	CRI*	Diffuser*	Mounting*	Emergency	Canopy	Other Than Standard Options
AIP9960										
									Finish:	
	A		B	C	D	E	F	G	H	I

A - LIGHT SOURCE *

To ensure color consistency, SPI uses precise bin selection and strict quality processes to maintain a 3-step (MacAdam) SDCM on all white LED lampings. Published LED luminaire wattages are calculated using a typical power supply efficiency of 88%; exact wattages may vary based on application.

- ☐ **L57W** | White 57W LED Light Engine | Delivered Lumens: 4,049
- ☐ **L115W** | White 115W LED Light Engine | Delivered Lumens: 8,099
- ☐ **6N100** [1] | 6INC100W/A19

See last page for finish options

[1] Incandescent Lamp(s) Not Included

B - VOLTAGE *

- ☐ **120-277V** | Universal Voltage
- ☐ **120V** [2] | 120 Volt

[2] For incandescent light source only

C - LAMP OPTIONS *

Apply multiplier from chart for delivered lumens at other CCT's and CRI's. Not required with incandescent.

- ☐ **2700K** | 2700K CCT
- ☐ **3000K** | 3000K CCT
- ☐ **3500K** | 3500K CCT
- ☐ **4000K** | 4000K CCT
- ☐ **5000K** | 5000K CCT

	80 CRI	90 CRI
2700K	1.00	0.84
3000K	1.00	0.84
3500K	1.00	0.84
4000K	1.00	0.84
5000K	1.00	0.84

D - CRI *

- ☐ **DF_80** | (default)
- ☐ **90**

E - DIFFUSER *

- ☐ **DF_OA** | Opal Acrylic Diffuser Lens (default)
- ☐ **HP01** | Silver Hand Painted Acrylic Diffuser
- ☐ **HP02** | Beige Hand Painted Acrylic Diffuser
- ☐ **HP03** | Amber Hand Painted Acrylic Diffuser
- ☐ **MA01** | Matte Acrylic Diffuser Lens

F - MOUNTING *

Mounts to standard 4" octagonal junction box with auxiliary mounting holes. Additional support required (by others).

- ☐ **DF_STM** | Stem Mount (default)

G - EMERGENCY

10W, Constant Power Battery Back-up, with 90 minutes of emergency operation. EMR includes damp location enclosure for Battery back-up.

- ☐ **EMR** | Emergency Battery Remote

H - CANOPY

☐ **SAM45 |** 45 Degree Swivel (See last page for finish options)

I - OTHER THAN STANDARD OPTIONS

Specify overall height required from ceiling to the bottom of the fixture. Stem accessories do not vary with overall height (OAH) changes.

OAH | Pendant suspension length other than standard Length:

Standard Finishes

The colors shown are representative. Their actual appearance may vary due to differences in display settings. You can request color chips by emailing contact@spilighting.com. Please note, finishes may not be available in all configurations.

Paint Colors

PT01 RAL9003 Signal White (Gloss)	**PT51** Matte White (Textured)	**PT02** White (Textured)	**PT04** RAL9001 Cream (Textured)	**PT67** RAL7044 Silk Grey (Textured)
PT53 RAL7035 Light Grey (Textured)	**PT54** RAL7037 Dusty Grey (Textured)	**PT55** RAL7012 Basalt Grey (Textured)	**PT56** RAL7016 Anthracite Grey (Textured)	**PT11** Black (Textured)
PT57 RAL1015 Light Ivory (Textured)	**PT58** RAL8004 Copper Brown (Textured)	**PT59** RAL6021 Pale Green (Textured)	**PT60** RAL1019 Grey Beige (Textured)	**PT61** RAL7006 Beige Grey (Textured)
PT62 RAL1003 Signal Yellow (Textured)	**PT63** RAL3001 Signal Red (Textured)	**PT64** RAL6001 Emerald Green (Textured)	**PT65** RAL5005 Signal Blue (Textured)	**PT66** RAL5003 Sapphire Blue (Textured)

Metallic Paint Colors

PT22 Platinum (Metallic Gloss)	**PT48** Brass (Metallic Textured)	**PT28** Dark Stainless (Metallic Gloss)	**PT49** Bronze (Metallic Textured)	**PT32** Dark Bronze (Metallic Gloss)
PT46 Aluminum (Metallic Textured)				

Brushed Aluminum

BAL Brushed Aluminum

Brushed Brass

BBR Brushed Solid Brass

Polished-Tinted Brass

ATBR Antique Tinted Brass	**DTBR** Dark Tinted Brass	**PBR** Polished Brass

Polished Plated Brass

CPBR Chrome Plated Polished Brass	**SNBR** Satin Nickel Plated Brass

Specialty Finishes

More RAL®, Pantone®, and custom finishes are available upon request. Setup fee and additional lead time applies.Call factory for details.