INACTIVE SPEC SHEET

Marker - Ceiling

EIC11837 4.50 in

SPI LIGHTING

PROJECT DETAILS

JOB NAME:

TYPE:

NOTES:

DESCRIPTION

Enjoy maximum flexibility in designing your space with the Marker. This collection offers ceiling mounts and wall sconces, both available in a round or square shape. Illumination patterns can be specifically tailored to your space by choosing one of several options available. Utilizing a low-energy consumption LED light source, the Marker is a highly efficient and cost saving option. Choose from a palette of both painted and metal finishes.

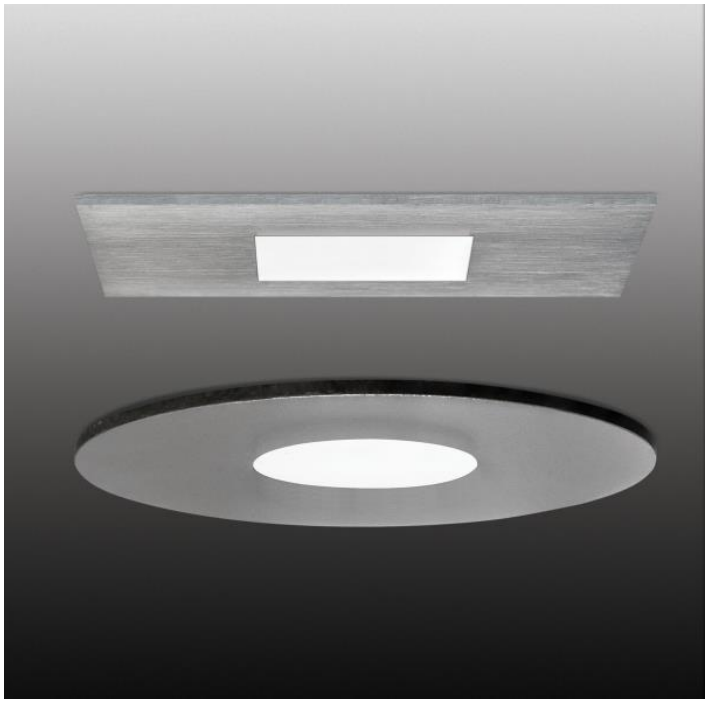

FEATURES & BENEFITS

- Optically engineered, precision LED optics control light distribution and direct light where it is needed
- Handcrafted in USA

SPECIFICATIONS

- **LIGHT SOURCE:** White LED light engine
- **CRI:** 80+
- **LUMEN MAINTENANCE:** L70 = >50,000 Hrs.
- **DRIVER:** Integral Class 2 power supply standard
- **DIMMING:** 0-10V controls standard on LED light engines
- **CONSTRUCTION:** Aluminum construction provides durable protection for internal components and is recyclable
- **FINISH:** Choose from 26 standard thermoset polyester powder coat paint colors or various metal finishes. RAL®, Pantone®, or custom finishes available upon request.
- **MOUNTING:** Mounts to standard 4" octagonal junction box
- **MODIFICATIONS:** Consult factory for all modification requests
- **APPROVALS:** ETL listed to UL standards (US and Canada) for use in damp locations; not recommended for exterior applications

DIMENSIONS

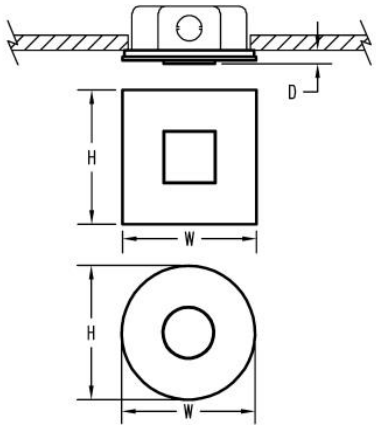

W	H	D
4.5 in 11.4 cm	4.5 in 11.4 cm	0.5 in 1.3 cm

Mounting Weight
Consult Factory.

CONFIGURATOR

To configure your spec sheet online, go to www.spilighting.com/EIC11837. Not all options are available in all configurations; consult factory for details.

Required Field *

Catalog	Light Source*	Primary Finish*	Voltage	Color Accents	Motif Accents*	Options
EIC11837						
	A		B	C	D	E

A - LIGHT SOURCE *

To ensure color consistency, SPI uses precise bin selection and strict quality processes to maintain a 3-step (MacAdam) SDCM on all white LED lampings. Published LED luminaire wattages are calculated using a typical power supply efficiency of 88%; exact wattages may vary based on application.

☐ **L4W** | White 4W LED Light Engine 3000K

See last page for finish options

B - VOLTAGE

☐ **120-277V** | Universal Voltage

C - COLOR ACCENTS

Standard diffuser is frosted acrylic. To add a color gel, please choose one of the following:

☐ **CG01** | Red Color Gel
☐ **CG02** | Orange Color Gel
☐ **CG03** | Green Color Gel
☐ **CG04** | Blue Color Gel

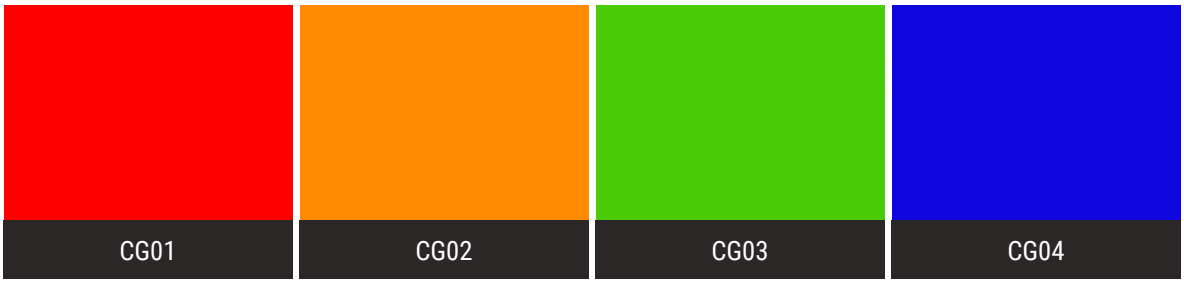

D - MOTIF ACCENTS *

- ☐ **FP01** | Square Recessed Lens
- ☐ **FP02** | Square Proud Lens
- ☐ **FP03** | Round Recessed Lens
- ☐ **FP04** | Round Proud Lens

E - OPTIONS

- ☐ **AEX** | Acrylic Extension
- ☐ **CS1** | Cut-Off Shield
- ☐ **FPL** | Face Plate
- ☐ **LVR** | Louver
- ☐ **EDG** | Edge Lit

Standard Finishes

The colors shown are representative. Their actual appearance may vary due to differences in display settings. You can request color chips by emailing contact@spilighting.com. Please note, finishes may not be available in all configurations.

Paint Colors

PT01
RAL9003 Signal White (Gloss)

PT51
Matte White (Textured)

PT02
White (Textured)

PT04
RAL9001 Cream (Textured)

PT11
Black (Textured)

Brushed Stainless

BSS
Brushed Stainless Steel

Metallic Paint Colors

PT22
Platinum (Metallic Gloss)

PT48
Brass (Metallic Textured)

PT28
Dark Stainless (Metallic Gloss)

PT49
Bronze (Metallic Textured)

PT32
Dark Bronze (Metallic Gloss)

PT46
Aluminum (Metallic Textured)

Brushed Aluminum

BAL
Brushed Aluminum

Specialty Finishes

More RAL®, Pantone®, and custom finishes are available upon request. Setup fee and additional lead time applies.Call factory for details.