Lyon - Suspended

SIP12105 96.10 in

SPI LIGHTING
PROJECT DETAILS

JOB NAME:
TYPE:
NOTES:

DESCRIPTION

Lyon is a family of small-scale linear LED fixtures that delivers impressive performance at an affordable price. Designed for continuous runs, it features end-to-end connections with minimal seams. Lyon's low-profile housing and discreet canopy provide a clean, streamlined appearance. The lens, available in five shapes, softly diffuses light with minimal glare. Lyon's simple design and versatility make it suitable for many kinds of spaces. Available in interior and exterior pendant, ceiling, and wall mount versions in 4' and 8' lengths.

90+HE CRI | MADE IN USA BABA | EMR | WC

FEATURES & BENEFITS

- Choose from 5 diffuser shapes
- Configure in a run or hang as a pendant
- Housing is engineered to act as an efficient heat sink, maximizing output and life by allowing the LEDs to operate at optimal temperatures
- Up to 1495 lm/foot delivered at high wattage
- Semi-direct distribution of 89% direct/11% indirect
- Anodized finish provides durable corrosion protection
- Available in low, medium and high wattages
- Provides functional lighting with comfortable luminance levels
- Handcrafted in USA

SPECIFICATIONS

- **LIGHT SOURCE:** White LED light engine
- **CRI:** 90+HE
- **LUMEN MAINTENANCE:** L70 = >50,000 Hrs.
- **EFFICACY:** 105 lm/W delivered
- **CCT**: 2700K, 3000K, 3500K, 4000K, 5000K
- **VOLTAGE:** 120-277V standard
- **DRIVER:** Includes remote Class 2 power supply, enclosure and white power cord(s). Continuous runs are supplied with one power supply per fixture. Max distance to the driver (including OAH) is: #18 AWG = 50', #16 AWG = 75', #14 AWG = 100'. For extended distances, contact factory.
- **DIMMING:** 1% minimum dim level standard

- **CONTROLS:** 0-10V standard. Lutron Athena, Current NX, and nLight AIR optional. Contact factory for other controls (e.g., Enlighted, Encelium, Wattstopper, WaveLinx, or Casambi)
- **EMERGENCY:** Remote battery option is provided with 10W Constant Power Battery back-up, providing 90 Minutes of Emergency operation. Contact factory for other Emergency options.
- **INTEGRATED SURGE PROTECTION:** LED components are protected against minor surge events
- **LENS:** Diffused acrylic lens
- **CONSTRUCTION:** Housing fabricated from 6000 series aluminum extrusion
- **FINISH:** Housing features available in anodized finish only with end cap and mounting components painted to match
- **MODIFICATIONS:** Consult factory for all modification requests, including RGB and static LED colors
- **APPROVALS:** ETL listed to UL standards (US & Canada) for use in damp locations; not recommended for exterior applications

DIMENSIONS

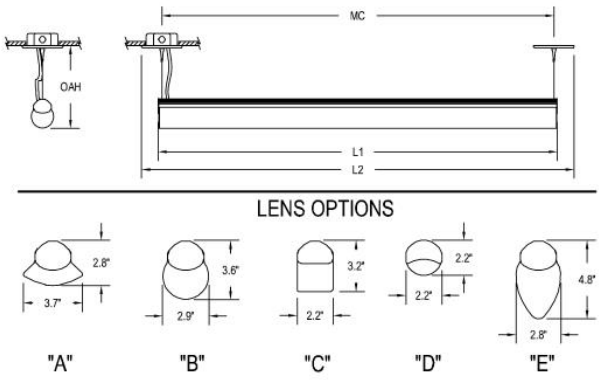

L1	L2	OAH	MC
96.1 in 244.1 cm	100.2 in 254.5 cm	36 in 91.4 cm	94.3 in 239.5 cm

Mounting Weight
Consult Factory.

CONFIGURATOR

To configure your spec sheet online, go to www.spilighting.com/SIP12105. Not all options are available in all configurations; consult factory for details.

Required Field *

Catalog	Light Source*	Primary Finish*	Voltage*	Lamp Options*	CRI*	Controls*	Mounting*	Linear Run	Emergency	Lens Shapes*	Options	Other Than Standard Options
SIP12105											Finish:	
	A		B	C	D	E	F	G	H	I	J	K

A - LIGHT SOURCE *

To ensure color consistency, SPI uses precise bin selection and strict quality processes to maintain a 3-step (MacAdam) SDCM on all white LED lampings. Published LED luminaire wattages are calculated using a typical power supply efficiency of 88%; exact wattages may vary based on application. Alternative wattages available upon request.

- ☐ **L28W** | White 28W LED Light Engine | Delivered Lumens: 2,940
- ☐ **L56W** | White 56W LED Light Engine | Delivered Lumens: 5,880
- ☐ **L113W** | White 113W LED Light Engine | Delivered Lumens: 11,865
- ☐ **Cust_Out** |

Lumen Calculator: Enter Lumens or Watts if different than displayed

_____ LU Min 2940 - Max 11865

_____ W Min 28.0 - Max 113.0

See last page for finish options

*For requests outside Min-Max range, please contact factory.

B - VOLTAGE *

- ☐ 120-277V | Universal Voltage

C - LAMP OPTIONS *

- ☐ 2700K | 2700K CCT
- ☐ 3000K | 3000K CCT
- ☐ 3500K | 3500K CCT
- ☐ 4000K | 4000K CCT
- ☐ 5000K | 5000K CCT

D - CRI *

- ☐ DF_90+HE | 90+ High Efficacy

E - CONTROLS *

Extended lead times may apply for controls other than 0-10V. Contact factory for additional control options such as Enlighted, Encelium, Wattstopper, WaveLinx, Casambi, or others.

- ☐ DF_DIM1 | 0-10V Control, 1% Dimming (default)
- ☐ AWNR | Lutron Athena Wireless Node, 1% Dimming
- ☐ NX | Current NX Wireless, 1% Dimming
- ☐ NLTA | Acuity nLight Air, 1% Dimming

F - MOUNTING *

Mounts to standard 4” octagonal junction box. Default CAA mounting features two canopies and two aircraft cables that are field adjustable to allow the fixture to be mounted at an application appropriate height. Canopies and power cord are white. INSTALLATION NOTES: During installation the contractor is responsible to use actual fixtures to ensure accurate mounting centers from one fixture to the next along the length of the linear run. Choose a mounting from below:

- ☐ DF_CAA | 5"Canopies, Aircraft Cable, Power Cord & Remote Supply (default)
- ☐ CAS [1] | 5" Canopies & 5/8" Stems, Remote Supply

[1] Stem mounting not available in high wattage linear run. Stems and canopies are painted to match anodized finish

G - LINEAR RUN

Select this option only for runs longer than 8'. Continuous runs are configured with standard 4' and 8' sections; consult factory for other lengths.

☐ RUN [2] | Continuous Run **OAL** | Specify Length of Run Length:

[2] For a take-off and pricing, contact factory

H - EMERGENCY

10W, Constant Power Battery Back-up, with 90 minutes of emergency operation. EMR includes damp location enclosure for Battery back-up. When specifying EMR with RUN, the first fixture in the run will be the emergency unit. If other or different Emergency units are needed, contact factory. Additional Power feed location will be required to power non-emergency sections.

☐ EMR | Emergency Battery Remote

I - LENS SHAPES *

Shown at top with shape "B". See line art for dimensions.

- ☐ A | Lens Shape "A"
- ☐ B | Lens Shape "B"
- ☐ C | Lens Shape "C"
- ☐ D | Lens Shape "D"
- ☐ E | Lens Shape "E"

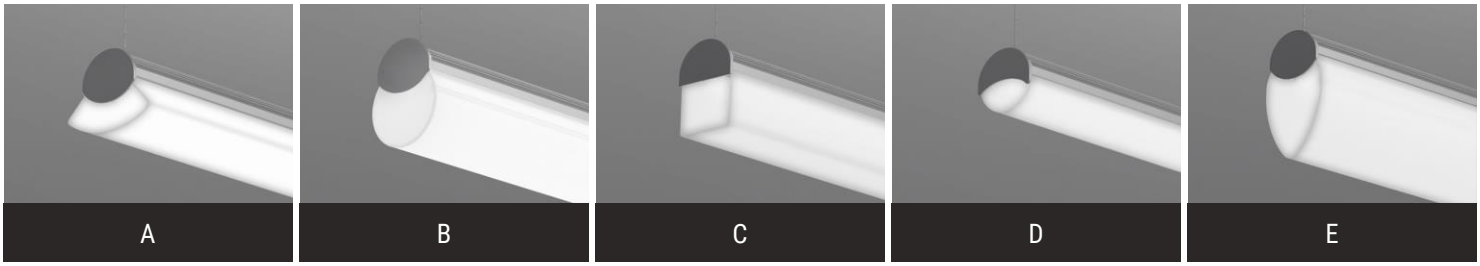

J - OPTIONS

Alternate end cap finish (AEF) specified separately.

☐ AEF [3] | Alternate End Cap Finish (See last page for finish options)

[3] Available in painted finishes only

K - OTHER THAN STANDARD OPTIONS

Specify overall height required from ceiling to the bottom of the fixture.

OAH | Pendant suspension length other than standard Length:

Standard Finishes

The colors shown are representative. Their actual appearance may vary due to differences in display settings. You can request color chips by emailing contact@spilighting.com. Please note, finishes may not be available in all configurations.

Paint Colors

PT01 RAL9003 Signal White (Gloss)	**PT51** Matte White (Textured)	**PT02** White (Textured)	**PT04** RAL9001 Cream (Textured)	**PT67** RAL7044 Silk Grey (Textured)
PT53 RAL7035 Light Grey (Textured)	**PT54** RAL7037 Dusty Grey (Textured)	**PT55** RAL7012 Basalt Grey (Textured)	**PT56** RAL7016 Anthracite Grey (Textured)	**PT11** Black (Textured)
PT57 RAL1015 Light Ivory (Textured)	**PT58** RAL8004 Copper Brown (Textured)	**PT59** RAL6021 Pale Green (Textured)	**PT60** RAL1019 Grey Beige (Textured)	**PT61** RAL7006 Beige Grey (Textured)
PT62 RAL1003 Signal Yellow (Textured)	**PT63** RAL3001 Signal Red (Textured)	**PT64** RAL6001 Emerald Green (Textured)	**PT65** RAL5005 Signal Blue (Textured)	**PT66** RAL5003 Sapphire Blue (Textured)

Anodized

AN04 Anodized

Metallic Paint Colors

PT22 Platinum (Metallic Gloss)	**PT48** Brass (Metallic Textured)	**PT28** Dark Stainless (Metallic Gloss)	**PT49** Bronze (Metallic Textured)	**PT32** Dark Bronze (Metallic Gloss)
PT46 Aluminum (Metallic Textured)				

Specialty Finishes

More RAL®, Pantone®, and custom finishes are available upon request. Setup fee and additional lead time applies.Call factory for details.